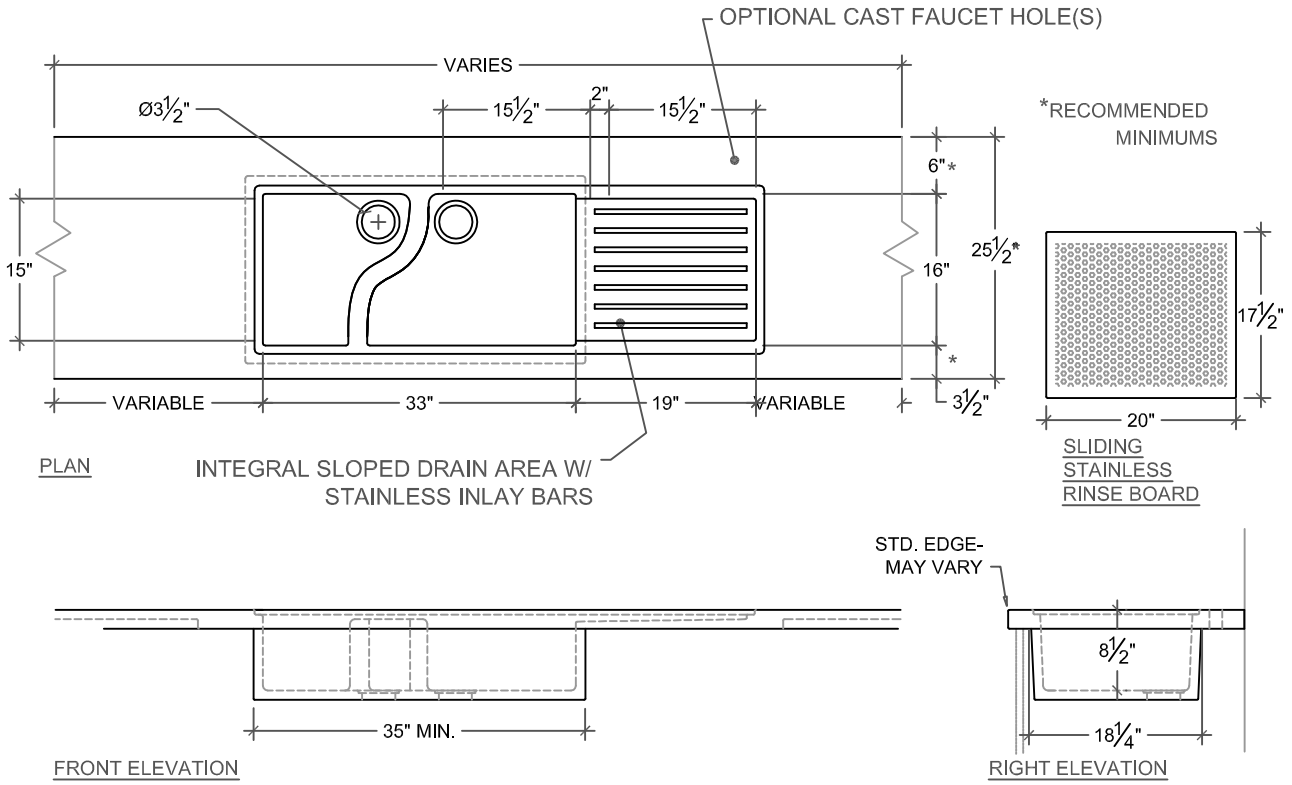

MODEL CHF-R
CUSTOM CAST COUNTER WITH INTEGRAL CHEFSINK, RIGHT HAND

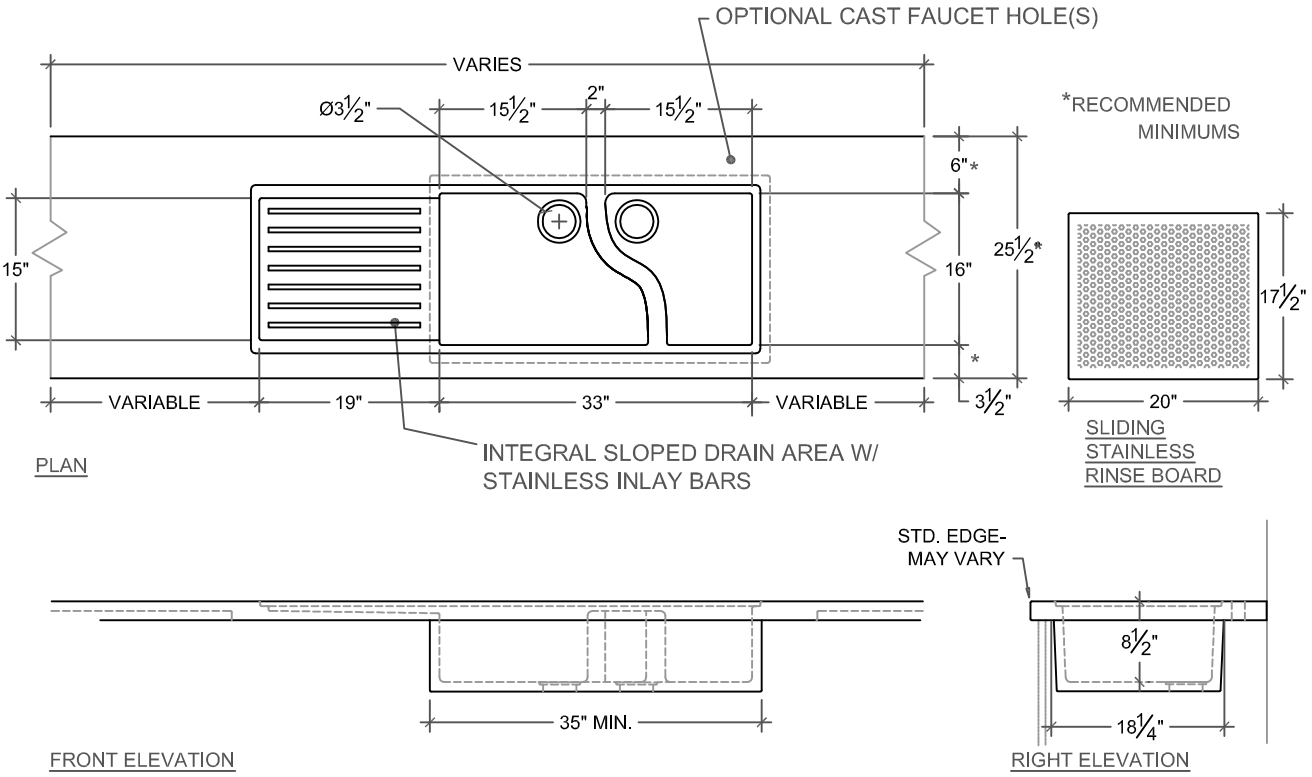

MODEL CHF-L
CUSTOM CAST COUNTER WITH INTEGRAL CHEFSINK, LEFT HAND

SONOMA CAST STONE
CORPORATION
133 COPELAND STREET PETALUMA, CA 94952
707-283-1888
FAX 707-283-1899

CHEFSINK OPTIONS
WITH DRAINBOARD

VERSION 6/10