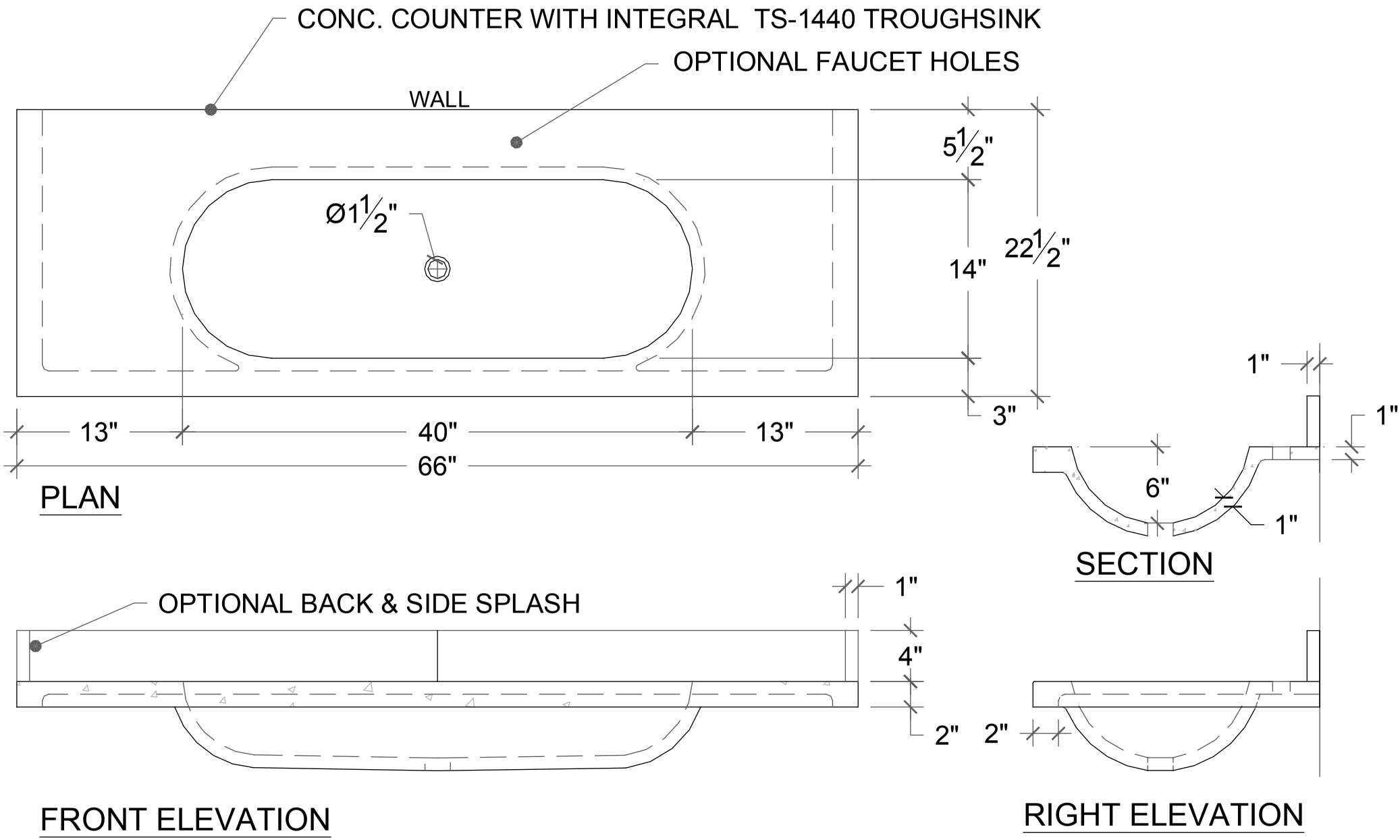
CONC. COUNTER WITH INTEGRAL TS-1440 TROUGHSINK
OPTIONAL FAUCET HOLES
WALL
Ø1½"
5½"
14"
22½"
3"
13"
40"
13"
66"
PLAN
1"
1"
6"
1"
SECTION
OPTIONAL BACK & SIDE SPLASH
1"
4"
2"
2"
FRONT ELEVATION
RIGHT ELEVATION